TEKA
TECHNIK & KÜCHE

60cm 9 Function Oven with Hydroclean®

MODEL: HLB 850

Features
80L gross oven capacity
9 functions
Fingerprint proof stainless steel
Hydroclean® cleaning system
Touch control programmable clock timer
Interior light & 2 speed cooling fan
Stainless steel w. black cover knobs
Chromed supports w. telescopic guide
Soft close triple glazed glass door
Easy to remove door system
A+ European energy class
Child safety lock
Deep tray & reinforced cooking grid
Mechanical preheating
Quick heating mode

9 × Cooking Functions
› Fan-Forced
› Maxi Grill
› Bake
› Bottom Heat (Pastry)
› Grill
› Grill + Bottom (Roast)
› Defrost
› Pizza
› Eco Mode

Product Dimensions
Physical (w, d, h mm)
› 595 × 559 × 595

Warranty
5 years (3+2 on registration)

Cleaning
Easy to remove inner door glass
Easy to remove door
Crystal clean enamel to oven interior
Fingerprint proof stainless steel
Hydroclean® cleaning system

Requirements
Rated Power: 220–240V
Maximum Power: 3215W
Installation: Hard-wired
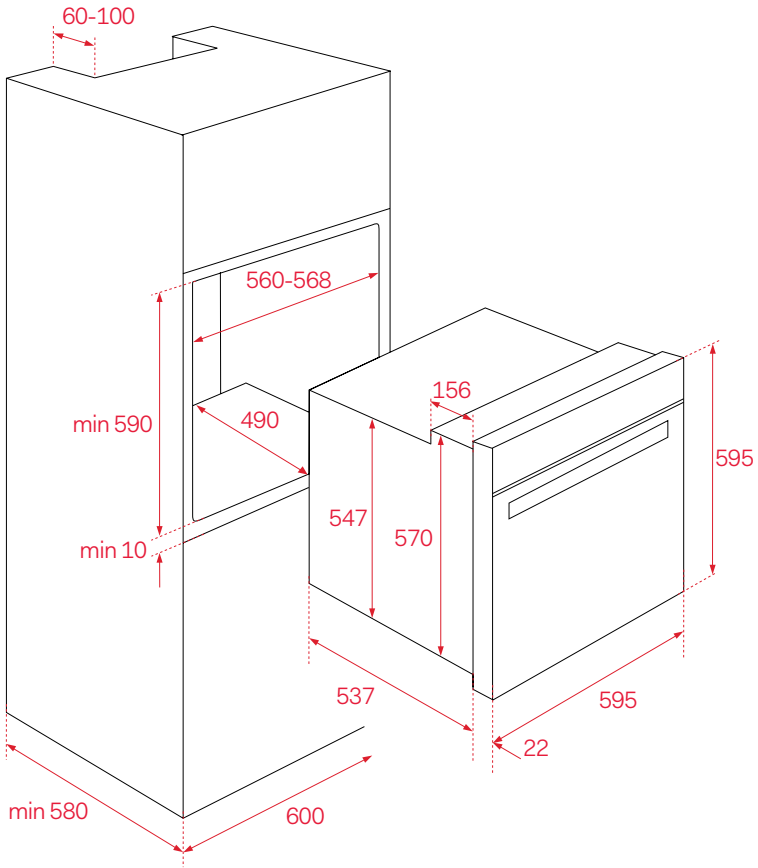
Below: Installation